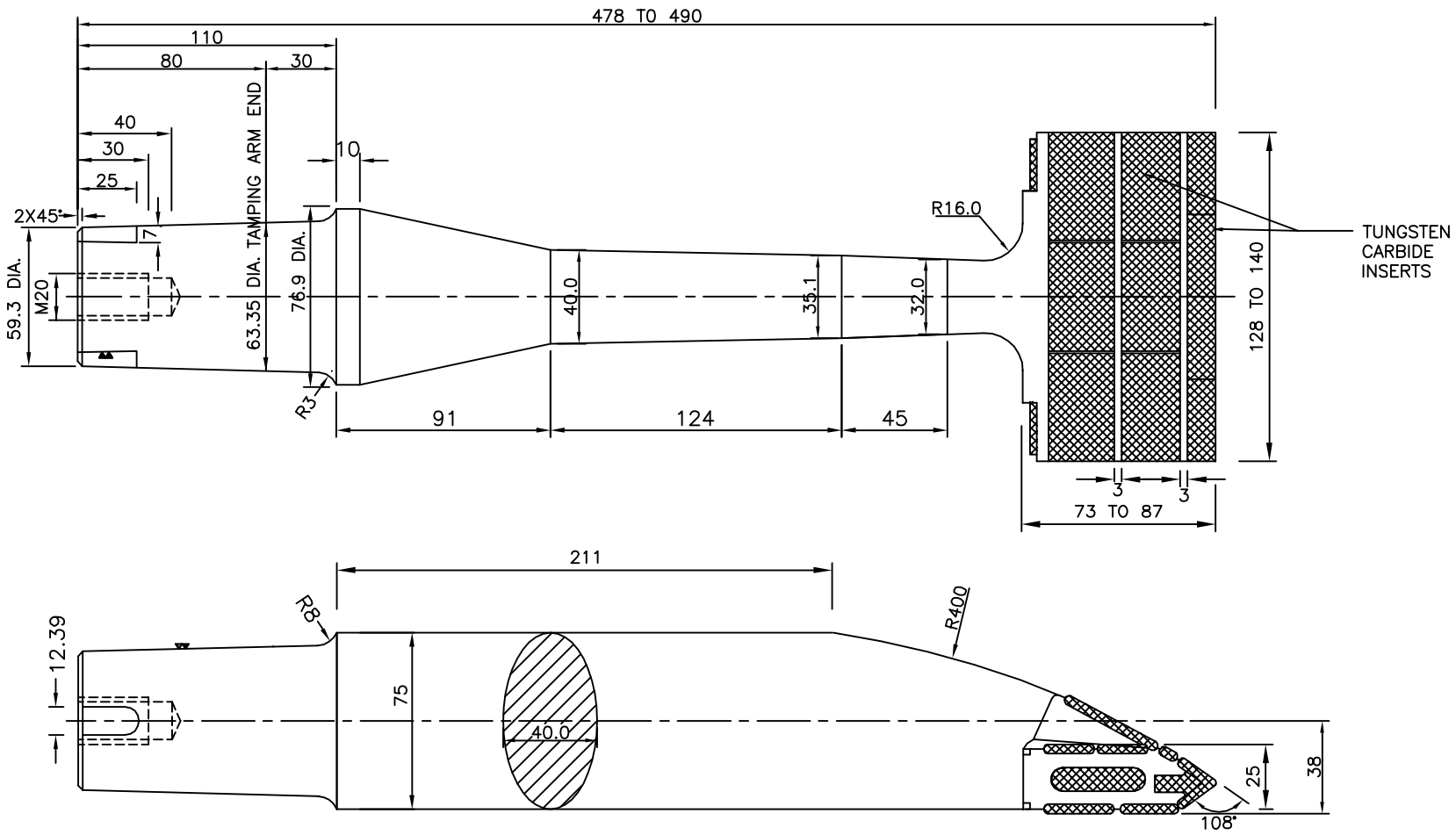


6. THIS DRAWING IS FOR GENERAL GUIDANCE PURPOSE. MINOR DEVIATIONS IN SHAPE/SIZE IS ACCEPTABLE SUBJECT TO ITS FITMENT IN THE MACHINE AND PERFORMANCE IN THE FIELD AS MENTIONED IN THE SPECIFICATION.
5. LENGTH OF TOOL, WIDTH & HEIGHT OF SPADE SHOULD BE WITHIN THE RANGE GIVEN.
4. THICKNESS OF CARBIDE CHIPS SHALL NOT BE LESS THAN 3 mm.
3. MATERIAL COMPOSITION AND OTHER DETAILS OF SPECIFICATION NO TM/HM/6/320-REV-3 SHALL BE FOLLOWED.
2. ROUNDING OFF TO BE DONE TO 3 mm RADII WHEREVER NOT SPECIFIED.
1. ALL DIMENSIONS ARE IN MILLIMETRES.

R. D. S. O.

TUNGSTEN CARBIDE TAMPING TOOL (STRAIGTH) FOR CSM & DUO (OLD MODEL) TAMPING MACHINE

CANCLD./SUPSED- RDSO/TM/02A/09 (REV-1)
REV-

| N O T E S | TM/HM/6/320-REV-3 SPECIFICATIONS | SCALE | ALT. | DESCRIPTION | AUTHY | DRG.No. RDSO/TM/14A/16 (REV.-1) |
|---|---|---|---|---|---|---|